Model 7-7800

Personal Audio/Video Entertainment Center with 9″ Color TV/Radio/ Cassette Recorder/Player

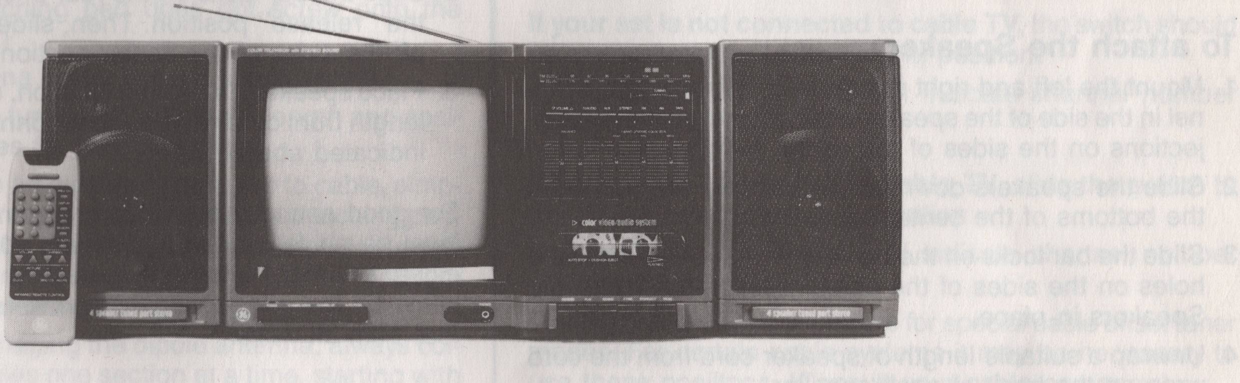

NOTE: 2 ''AAA'' BATTERIES REQUIRED FOR REMOTE CONTROL OPERATION. BATTERIES ARE NOT INCLUDED.

WARNING: TO PREVENT FIRE OR ELECTRIC SHOCK HAZARD, DO NOT EXPOSE THIS PRODUCT TO RAIN OR MOISTURE.

	CAUTION RISK OF ELECTRIC SHOCK DO NOT OPEN	
THE LIGHTNING FLASH AND ARROW-HEAD WITHIN THE TRIANGLE IS A WARNING SIGN ALERTING YOU OF ''DANGEROUS VOLTAGE'' INSIDE THE PRODUCT.	CAUTION: TO REDUCE THE RISK OF ELECTRIC SHOCK, DO NOT REMOVE COVER (OR BACK). NO USER-SERVICEABLE PARTS INSIDE. REFER SERVICING TO QUALIFIED SERVICE PERSONNEL.	THE EXCLAMATION POINT WITHIN THE TRIANGLE IS A WARNING SIGN ALERTING YOU OF IMPORTANT INSTRUCTIONS ACCOMPANYING THE PRODUCT.

SEE MARKING ON BOTTOM / BACK OF PRODUCT

Use and Care Guide

NOTE: THIS PRODUCT IS CERTIFIED BY THE MANUFACTURER TO COMPLY WITH DHHS RULES 21 CFR, SUBCHAPTER J APPLICABLE AT THE DATE OF MANUFACTURE.

RECORD SERIAL NUMBER:

According to some State laws, and in the event service should be required, you may need both Model and Serial Numbers. Please record the Serial Number (located on the back of the center section) in the space below:

SERIAL NO. ____________________

DETACHABLE SPEAKERS

The Speakers can be used attached to the unit or, to enhance the stereo effect, separated from the center section.

To attach the Speakers:

1. Mount the left and right speakers by aligning the channel in the side of the speaker cabinets just above the projections on the sides of the center section.
2. Slide the speakers down so the bottoms are flush with the bottoms of the center section.
3. Slide the bar locks on the backs of the Speakers into the holes on the sides of the center section to "lock" the Speakers in place.
4. Unwrap a suitable length of speaker cord from the cord wrap on the back of each speaker.
5. Connect the right speaker cord's red and black wires to the red and black speaker terminals (on the back of the center section) marked "RIGHT", and the left speaker cord's wires to the terminals marked, "LEFT".

   Press down on the clip, insert wire into the round slot and release clip to secure.
6. Wind any extra cord onto the cord wraps on the back of each speaker.

To Detach the Speakers:

1. Disconnect the speaker cords from the center section's terminals.
2. Slide the bar locks on the rear of each speaker towards the "release" position. Then, slide the speaker up and off the sides of the center section.
3. Place speakers in desired location, unwrap required cord length from cord wraps and reconnect speaker cords as indicated above.

For good sound reproduction, place the speakers at ear level seven feet apart and facing you. Placing speakers close to walls will accentuate the bass response. To eliminate this effect, keep the speakers at least two or three feet from all walls.

ANTENNAS

AM RADIO Antenna — The built-in antenna is somewhat directional and it may be necessary to rotate the unit for best reception. (The VHF/UHF/FM dipole antenna is not used for AM reception.)

VHF/UHF-TV, FM RADIO Dipole Antenna — This antenna is a telescopic, swivel antenna.

- Check to be sure the antenna's twin lead (on the back of the center section) is connected to the antenna screw terminals on the 75-300 ohm antenna matching pad.
- Push the matching pad over the threaded "antenna" screw terminal on the back of the set.

  (**NOTE:** The matching pad does not screw onto the terminal.)
- Extend the antenna poles to their fullest length.

  — After the unit is turned on, adjust the length and position of the poles for best reception.

To connect the set to an outside antenna or to cable, simply disconnect the twin lead from the antenna matching pad. (A storage area for the matching pad is located to the left and slightly down from the screw terminal. Push the matching pad into the recess until it is secured.)

NOTE: To avoid damaging the dipole antenna, always collapse the poles one section at a time, starting with the largest diameter section. Do not push on the end of the antenna since buckling or bending is possible.

External VHF/UHF/FM Antenna — In the event receiving conditions at your location are unfavorable, an external antenna may be required for satisfactory VHF/UHF/FM reception. The antenna matching pad can be disconnected from the dipole and used to provide a quick connect of the unit to an external antenna system. An outdoor antenna usually provides overall improvement in UHF/VHF-TV and FM Radio reception.

Consult a local TV antenna dealer for recommendations and assistance to insure a safe and proper installation.

Cable TV Antenna — Cable TV (CATV) supplies television signals directly by cable without the need for a home antenna. The round 75-ohm coaxial cable used for Cable TV connects to the threaded "antenna" terminal on the back of the set. Consult your local Cable TV company for additional information and installation.

ANTENNA/STD/HRC/IRC SWITCH

This four-position switch, located at the bottom left on the center section's back, changes the tuner mode between direct "air" (VHF Channels 2-13 or UHF Channels 14-69) and one of three cable TV settings.

If your set is not connected to cable TV, the switch should be in the Antenna (extreme left) position.

- The On-Screen Display will indicate channel number preceded by "CH".

If your set is connected to cable TV, slide the switch to the STD (second from left) position.

- The On-Screen Display will indicate channel number preceded by "CATV".

The HRC and IRC positions are for special cable offset tuner modes. For certain cable systems it may be necessary to use these posiitons. (Consult your cable company.)

AC POWER

Plug the AC line cord into a working 120V AC household outlet.

The polarized AC line plug (one blade is wider) is a safety feature. The plug fits into the outlet only one way. If the plug doesn't go into the outlet completely, turn the plug over and put it in the other way. If it still doesn't fit contact a qualified electrician to change the outlet. **Do not defeat the safety purpose of the polarized plug.**

ON/OFF BUTTON

To turn the unit "ON", press POWER button. The Indicator will light.

- Unit will power up in the last function to which it was tuned.
- If tuned to TV, Channel number and Clock time will be displayed on screen, for approximately 6 seconds.
  - — If a power outage occurred or the unit was disconnected from AC power, Clock time will be blinking and must be reset. (See Remote Control Operation, Page 12.)
  - — After an extended power outage (more than 4-8 hours), the TV will revert to the factory settings for picture and clock, and when TV is turned on, the set will automatically program the scan list.

To turn the unit "OFF", press POWER button.

TABLE OF CONTENTS

RADIO CONTROLS AND FEATURES 5

RADIO OPERATION 6

- Balance Controls
- FM Modes
- Built-in AFC
- 3-Band Graphic Equalizer
- Antennas

CASSETTE RECORDER/PLAYER CONTROLS AND FEATURES 7

- Automatic Stop
- Rewind
- Fast Forward
- Pause Control
- Insert or Remove Cassette
- Tape Play
- Recording from Radio or TV Audio
- Oscillator Switch
- Tape Erase
- Prevent Accidental Erasure

TELEVISION CONTROLS AND FEATURES 10

TELEVISION OPERATION 11

- Autoprogramming

REMOTE CONTROL OPERATION 12

- Battery Installation
- Previous Channel
- Display (Channel/Time)
- Mute
- Memory
- TV/Audio
- Channel Up and Down
- +/Hours
- –/Minute
- Picture
- Clock (Set)
- Volume Up and Down
- 100+ Keypad
- Numeric Keypad Buttons..0-9
- Power

TV RECEPTION CHARACTERISTICS 15
AUX-IN JACKS 15
VARIABLE MONITOR 15
HEADPHONE JACK 15
PATCH CORD KIT 16
CLEANING THE HEADS 16
TAPE CARE 16
SERVICE CHECKLIST 17
SERVICE 17
SERVICE LITERATURE 17
FCC INFORMATION 17
WARRANTY .... BACK COVER

RADIO CONTROLS AND FEATURES

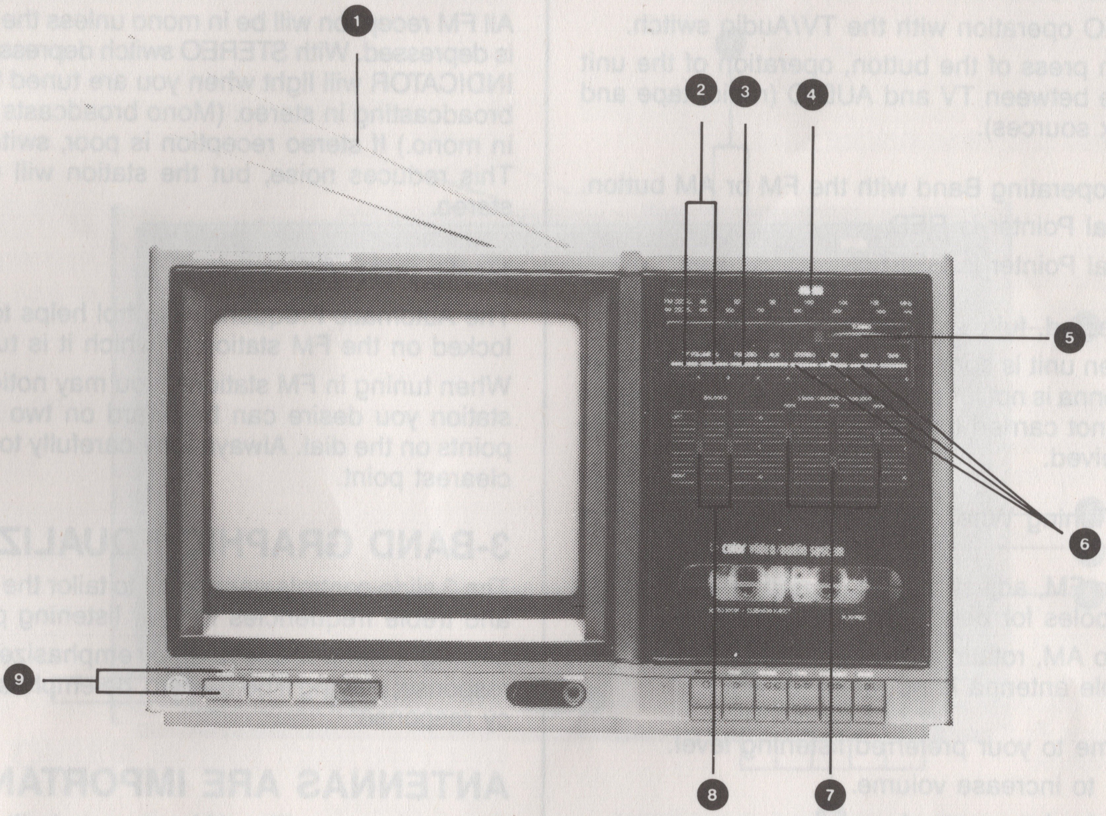

1. Telescoping, Swivel Whip FM Antenna
2. Volume UP/DOWN Controls
3. TV/AUDIO Switch
4. AM/FM Dial Scale Pointer
5. Radio Tuning Wheel
6. AM/FM/Stereo Switches
7. 3-Band Graphic Equalizer
8. Balance Control
9. Power On/Off Switch and Indicator Light.

RADIO OPERATION

With POWER turned on . . .

1. Select RADIO operation with the TV/Audio switch.
   - With each press of the button, operation of the unit will toggle between TV and AUDIO (radio, tape and audio aux sources).
2. Select your operating Band with the FM or AM button.
   - AM — Dial Pointer is RED.
   - FM — Dial Pointer is GREEN.

   If FM is selected, fully extend the dipole antenna.

   NOTE: When unit is connected to Cable TV, the dipole antenna is not functional. Also, some FM stations are not carried on cable and, thus may not be received.
3. Use Radio Tuning Wheel to select desired broadcast station.
   - If tuned to FM, adjust the length and position of the antenna poles for best reception.
   - If tuned to AM, rotating unit may improve reception. (The dipole antenna is not used for AM.)
4. Adjust Volume to your preferred listening level.
   - Press ▲ to increase volume.
   - Press ▼ to decrease volume.
5. Adjust BALANCE control.
6. Adjust 3-BAND GRAPHIC EQUALIZER controls to desired bass, mid-range and treble tone qualities. (See 3-BAND GRAPHIC EQUALIZER paragraph.)

BALANCE CONTROL

To adjust BALANCE for proper stereo separation, tune to a Mono (AM or FM) broadcast. Then, slowly slide the BALANCE control up or down until the sound seems to come from a point midway between the speakers.

FM MODES

All FM reception will be in mono unless the STEREO switch is depressed. With STEREO switch depressed, the STEREO INDICATOR will light when you are tuned to an FM station broadcasting in stereo. (Mono broadcasts will be received in mono.) If stereo reception is poor, switch STEREO off. This reduces noise, but the station will not be heard in stereo.

BUILT-IN AFC

The Automatic Frequency Control helps to keep the radio locked on the FM station to which it is tuned.

When tuning in FM stations, you may notice that often the station you desire can be heard on two or three nearby points on the dial. Always tune carefully to the loudest and clearest point.

3-BAND GRAPHIC EQUALIZER

The 3 slide controls permit you to tailor the bass, mid-range and treble frequencies to your listening preference.

Moving a control above zero, emphasizes the frequency response; moving it below zero, de-emphasizes the frequency response.

ANTENNAS ARE IMPORTANT

AM Antenna — The AM antenna, built into the unit, is somewhat directional. On weak stations, it may be necessary to rotate the unit for best reception. (The whip antenna is not used for AM reception.)

FM Antenna — Lift and extend the telescoping whip antenna. It may be necessary to adjust the length and direction of the antenna for best FM reception.

CASSETTE RECORDER/PLAYER CONTROLS AND FEATURES

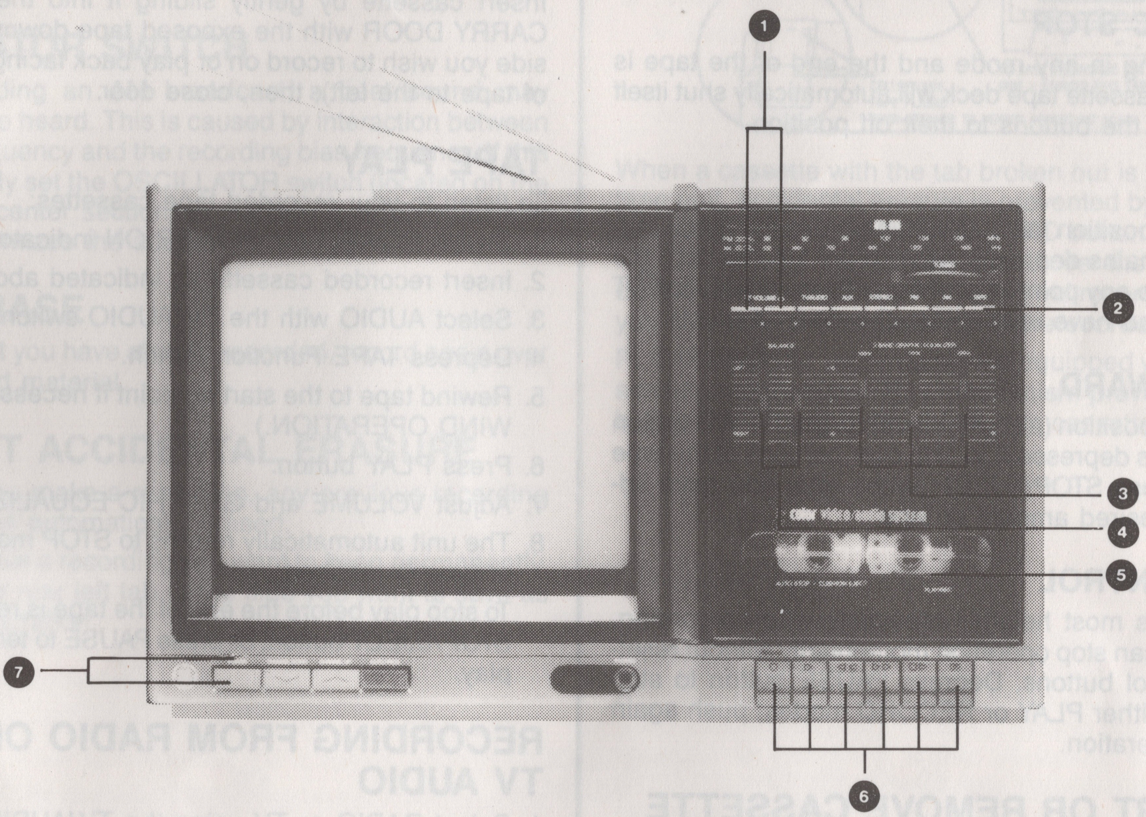

1. Volume Controls
   ▼ = down
   ▲ = up
2. Tape Function Switch
3. 3-Band Graphic Equalizer
4. Balance Control
5. Cassette Compartment
6. Tape Operation Buttons
   - Record
   - Play
   - Rewind
   - Fast Forward
   - Stop/Eject
   - Pause
7. Power On/Off Switch and Indicator Light

CASSETTE TAPE DECK OPERATION

AUTOMATIC STOP

When operating in any mode and the end of the tape is reached, the cassette tape deck will automatically shut itself off and return the buttons to their off position.

REWIND

While in OFF position (all buttons up), press REWIND button (which remains depressed) to run the tape back to the beginning or to any point of your tape. Press STOP/EJECT button after you have rewound to the desired point.

FAST FORWARD

While in OFF position (all buttons up), press F-FWD button (which remains depressed) to skip over portions of the tape quickly. Depress STOP/EJECT button after you have advanced the desired amount of tape.

PAUSE CONTROL

This feature is most helpful, especially when recording, because you can stop operation momentarily without resetting the control buttons. Depress PAUSE button to stop operation in either PLAY or RECORD modes; push again to resume operation.

TO INSERT OR REMOVE CASSETTE

The STOP/EJECT button is used to stop the recorder, eject the cassette, and open the CASSETTE CARRY DOOR. **However, an internal interlock prevents the cassette door from opening unless all controls are in the off (up) position.**

To insert or remove a cassette when any tape operation button is engaged, you must:

1. Press STOP/EJECT button (to return all buttons to their off position).
2. Press STOP/EJECT again to open the CASSETTE CARRY DOOR.

If no tape operation buttons are engaged, then the door will open on the first press of STOP/EJECT.

Insert cassette by gently sliding it into the CASSETTE CARRY DOOR with the exposed tape downward and the side you wish to record on or play back facing out (full reel of tape to the left); then, close door.

TAPE PLAY

To listen to your recorded tape cassettes:

1. Switch POWER on. POWER ON indicator will light.
2. Insert recorded cassette as indicated above.
3. Select AUDIO with the TV/AUDIO switch, then
4. Depress TAPE Function switch.
5. Rewind tape to the starting point if necessary. (See REWIND OPERATION.)
6. Press PLAY button.
7. Adjust VOLUME and GRAPHIC EQUALIZER controls.
8. The unit automatically returns to STOP mode when end of tape is reached.

   To stop play before the end of the tape is reached, press STOP/EJECT button, or press PAUSE to temporarily stop play.

RECORDING FROM RADIO OR TV AUDIO

1. Select RADIO or TV using the TV/AUDIO switch and tune in desired program as described in "RADIO OPERATION" or "TV OPERATION".
2. Insert a blank cassette into the Cassette Compartment.
3. When the segment you want to record begins, depress the RECORD button. You are now recording the radio or TV program on the tape.
4. When you finish recording, press STOP/EJECT button.

NOTE: The built-in Automatic Level Control (ALC) will automatically set the record level for optimum recordings. You can monitor (listen to) the radio or TV and adjust the VOLUME BALANCE and GRAPHIC EQUALIZER controls to suit your listening preference without affecting the recording.

OSCILLATOR SWITCH

When recording an AM broadcast, a beat sound may sometimes be heard. This is caused by interaction between the radio frequency and the recording bias frequency. If this occurs, simply set the OSCILLATOR switch (located on the back of the center section) to position A or B, whichever position minimizes the sound.

TAPE ERASE

To erase what you have already recorded, record again over the unwanted material.

PREVENT ACCIDENTAL ERASURE

Whenever you make a recording, any previous recording on the tape is automatically erased.

When you have a recording you want to keep permanently, break out the rear left tab of the side you want to save as shown in illustration.

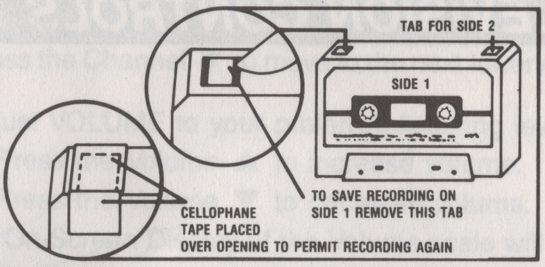

When a cassette with the tab broken out is inserted in the tape unit, accidental erasure is prevented by a lever in the mechanism that keeps the RECORD button from depressing. Cellophane tape can be placed over the opening if you decide later to record over the original recording. Similarly, you can record over purchased prerecorded cassettes.

PLEASE NOTE: Your machine is equipped with a cassette sensing mechanism. This mechanism prevents RECORD button from being depressed when cassette is not in unit.

TELEVISION CONTROLS AND FEATURES

1. Power On/Off Switch and Indicator Light
2. Channel Down Button
3. Channel Up Button
4. Auto Program Button
5. Balance Control
6. 3-Band Graphic Equalizer
7. Stereo switch and Indicator Light
8. TV/Audio Switch
9. Volume Controls
   ▼ = down
   ▲ = up

TELEVISION OPERATION

AUTOPROGRAMMING

When the set is first turned on in the TV mode after not being plugged in for an extended period, it will automatically scan the available channels in your selected Television mode. . .''Air'' or Cable (see ''ANTENNA/STD/HRC/IRC SWITCH'' paragraph). By doing so, it will generate a scan list, in memory, of those channels for which it receives a TV signal at your location. During the scan, an On-Screen Display will indicate Channel numbers and ''SEARCH''.

NOTE: Except for POWER, all other buttons are disabled during autoprogramming.

When scan is completed the TV will then tune to the lowest channel in the scan list memory and the Channel number and time will be displayed, on screen, for approximately 3-6 seconds.

Thereafter, pressing the Channel ▲ or ▼ button will move you to the next higher or lower channel available at your location, and skip those that are not available.

NOTE: Some undesired channels may be received depending on your local conditions: To delete these from the ''scan list'' see MEMORY key on page 7.

With POWER turned on . . .

1. Select TV operation with the TV/Audio Function button.
   - The Channel to which the TV is tuned, and
   - Time will be displayed for approximately 3-6 seconds. Time display will blink if time has not been set or if there has been a power interruption.

     (See,''Remote Control Operation'', page 12, to set the On-Screen Time Display.)
2. Press the Channel ▲ to move to the next higher channel.

   Press the Channel ▼ to move to the next lower channel.
3. Adjust VOLUME to your preferred listening level.
   - Press the Volume ▲ to increase volume.
   - Press the Volume ▼ to decrease volume.

   An On-Screen Display of the Volume scale will appear.
   - The number of vertical green bars will increase (left to right) as volume increases; bars will decrease as volume decreases.
   - When minimum or maximum volume level is reached, the scale will turn red.
4. Adjust Balance and Graphic Equalizer Controls.
5. Adjust the antenna dipoles for best reception (unless you are using cable).
6. If picture adjustments are required, refer to ''Remote Control Operation''.

STEREO SWITCH

All TV reception will be in mono unless the STEREO switch is depressed. With STEREO switch depressed, the STEREO INDICATOR will light when you are tuned to a TV program broadcasting in stereo. (Mono broadcasts will be received in mono.) If stereo reception is poor, switch STEREO off. This reduces noise, but the broadcast will not be heard in stereo.

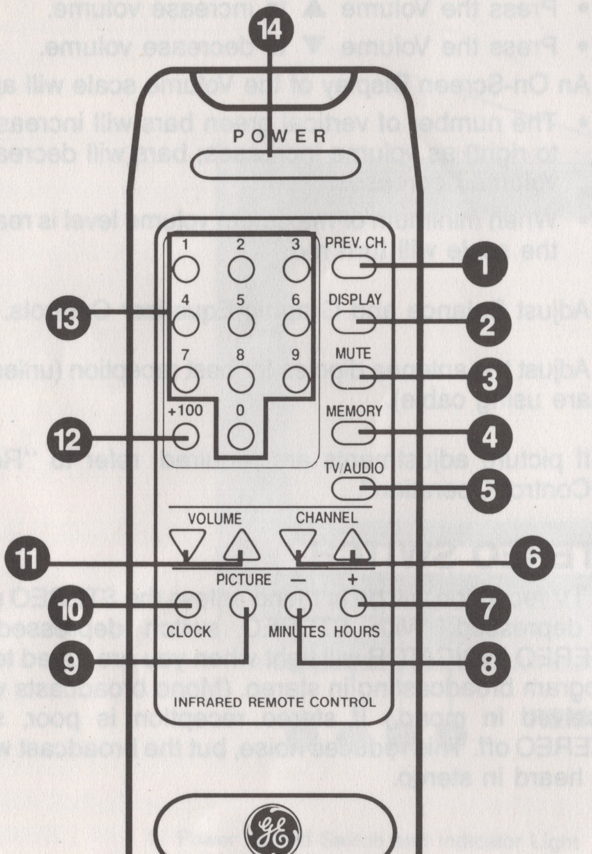

BATTERY INSTALLATION

- 2 "AAA"-size batteries (not included) are required for Remote Control unit operation.
- Install batteries as indicated on the diagram in the battery compartment on the bottom of the unit.
  - — To remove cover, press down on area with the arrow and slide cover off unit.
  - — To replace cover, place cover over battery compartment and slide back until it snaps in place.

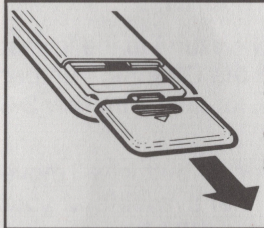

BACK OF UNIT

To remove battery cover, press down on area with arrow and slide cover off unit.

NOTE: If Remote Control operation of the TV unit appears intermittent or if the useable distance from the TV unit is reduced, the batteries may be weak and need replacing.

IMPORTANT: Be sure to remove batteries when you will not be using the Remote Control unit or when it will be in storage for more than a few weeks. Leaky batteries can badly damage the control. (When discarding batteries, be sure to dispose of them in the proper manner, in accordance with your state and local regulations.)

REMOTE CONTROL STORAGE

A storage bracket for the Remote Control unit is located on the back of the right speaker. Simply slide the unit down into the bracket from the top. The function buttons on the Remote Control unit should be facing outward.

Remote Control operation is effective to at least 15 feet from the unit and approximately 45 degrees to the right or left and up or down from the Remote Sensor on the unit (located to the left of the Headphone Jack). A clear path between the Remote Control Infrared Emittor and the Sensor is required.

The Remote Control unit enables you to perform the following functions:

1. PREVIOUS CHANNEL

Returns operation to the Channel you were watching before changing to the current Channel. Repeatedly pressing the button will toggle operation between the two Channels. When you select another Channel, it will toggle between the last Channel you were viewing and the new Channel.

2. DISPLAY (Channel/Time)

(Effective during TV mode only.)

Provides an On-Screen Display of the Channel in Operation and the Time. Display will remain on-screen until you again press the button.

3. MUTE

Silences TV audio. "MUTE" is displayed on the screen while in effect.

Press again to restore TV audio.

- On-Screen Display will indicate:
  - — Volume Scale, then
  - — Channel and Time.

Audio is also restored if a VOLUME button is pressed; however, it will be increased or decreased, depending on the button you press. On-Screen Displays will be the same as indicated above.

NOTE: Mute is not effective during AUDIO operation, such as AM/FM radio or tape.

4. MEMORY (Add/Delete Channels)

Used to add or delete a Channel from the Memory scan list generated by AUTO PROG.

The Channel Number Display on the screen will change colors when you add or delete a channel . . .

- Channels in MEMORY will be green.
- Channels **not** in MEMORY will be yellow.

To add a Channel . . .

- Key in the desired Channel using the Keypad. As the digits are pressed, the Channel number display will be ***green*** and larger than normal. It will then change to a normal size display in ***yellow*** (if not already stored in MEMORY).
- While the display is ***yellow***, press MEMORY.

The Channel is now stored in the Memory scan list and color goes to ***green***.

To delete a Channel . . .

- Key in the unwanted Channel using the keypad or one of the Channel buttons. The Channel number display will be ***green.***
- Press MEMORY and the Channel number turns ***yellow.***

The Channel is removed from the Memory scan list.

5. TV/AUDIO

With each press of the button, operation of the unit will toggle between TV and AUDIO, (RADIO, TAPE, AUDIO AUX sources) operation.

6. CHANNEL ▲ AND ▼

Press momentarily to move to the next higher or lower Channel available in the MEMORY scan list. Press and hold to scan through the channels

7. + /HOURS

A. When used in conjunction with the PICTURE button, press to increase:

Brightness
Tint
Contrast
Color
Sharpness

B. When used in conjunction with the CLOCK button, press to advance:

Hour (AM or PM time)

8. – /MINUTE

A. When used in conjunction with the PICTURE button, press to decrease:

Brightness
Tint
Contrast
Color
Sharpness

B. When used in conjunction with the CLOCK button, press to advance:

Minutes

9. PICTURE

When adjustments to the picture are required, press PICTURE. An On-Screen Display will appear indicating one of the following with each press of the button

Brightness
Tint
Contrast
Color
Sharpness

The Display will go out after approximately 10 seconds if no button is pressed.

The vertical green bars on the scale will indicate the level of the setting for that particular picture adjustment.

- Use the "+" button to increase the adjusted level. The number of green bars will increase.
- Use the "–" button to decrease the adjusted level. The number of green bars will decrease.

When maximum or minimum levels are reached, the scale will turn red.

NOTE: When adjusting Tint, only one green bar will appear and travel up and down the scale as you make your adjustments. It will not turn red.

10. CLOCK (SET)

If the unit was unplugged from AC power or if there was an AC power interruption, the Clock Display will blink when the TV is turned on and time must be reset.

To set the clock:

- Press clock.
- Press the HOUR button to arrive at the correct AM or PM hour.
- Press the MINUTES button to set the minutes.
  - —When MINUTES reaches 59, it will wrap around to 00 and start to increment again. The HOUR will not be affected.

The On-Screen Display will go out if the HOUR or MINUTE button is not pressed for 3-6 seconds.

11. VOLUME ▲ AND ▼

- Press ▲ to increase the Volume.
- Press ▼ to lower the Volume.

Although an On-Screen Display of the Volume scale will appear only when in TV mode, the setting is the same for TV and AUDIO (RADIO, TAPE, AUDIO AUX sources).

- The number of vertical green bars will increase (left to right) as volume increases; bars will decrease as volume decreases.
- When minimum or maximum volume level is reached, the scale will turn red.

12. 100+ KEYPAD BUTTON

When using the Keypad to change Channels press the 100+ key for Channels over 99. For instance, to change to Channel 108, press: 100+ and the 0 and the 8 buttons.

13. NUMERIC KEYPAD BUTTONS...0-9

To change Channels using the Keypad buttons, press the button or combination of buttons comprising the Channel number. For instance, to change to Channel 38, press the 3 button and then the 8 button; for Channel 66, press the 6 button twice.

14. POWER

Press the POWER button to turn the unit on; press again to turn the unit off.

NOTE: Unit will turn on in same mode (TV or Audio) in which it was turned off.

TV RECEPTION CHARACTERISTICS

The TV receiver is engineered to provide the highest quality performance possible. However, the location of the set, the position of the dipole antenna whips, your distance from the TV station and the strength of the TV signal received and whether or not you are connected to Cable TV, will all have a bearing on the quality of the reception at your particular location.

On occasion, you may experience some disruption in the picture or sound caused by locally generated interference. At times, the picture may flutter for several seconds. An airplane passing overhead may cause this to happen.

Trouble at the broadcasting station may also cause the same type of reception. Change Channels to see if other stations come in alright.

When pictures appear to be double, a reflected signal (ghost) is the cause. Change the direction or position of the antenna.

Spots, horizontal stripes, or picture flutter or drifts are usually caused by interference from automobile ignition systems, fluorescent lamps, electric drills and other electrical appliances. Change the direction or position of the antenna.

AUX AUDIO IN JACKS

You may connect another tape unit (to tape a tape) or a ceramic cartridge type turntable or compact disc (for play or record), as follows:

- Insert left, right output plugs from tape, turntable or CD in the R & L AUX AUDIO IN jacks on cabinet back.
- Switch POWER "ON".
- POWER INDICATOR lights.
- Select AUDIO mode with the TV/AUDIO switch.
- Press the AUX FUNCTION switch. AUX INDICATOR lights.
- Adjust controls as described earlier under RADIO or TAPE operation.

To record from AUX jacks:

- Press the RECORD button.

NOTE: The 'L' AUX can be used as the audio input for monaural sources.

AUX VIDEO IN JACK

You can connect a VCR for play of your video cassettes.

- Follow the steps under "Aux Audio In Jacks" except select TV mode with the TV/Audio switch.
- Then, insert the video output plug from the VCR in the AUX VIDEO IN jack on the cabinet back. (The Jack is located to the right of the Antenna/STD/HRC/IRC switch.)

VARIABLE MONITOR

When recording from other sound sources via AUX, the VOLUME, BALANCE and GRAPHIC EQUALIZER controls can be adjusted to the listening level you prefer with no effect to the recording. You can also use headphones (Optional Accessory) if desired.

HEADPHONE JACK

The 3.5 mm headphone jack on the front of the unit is for the use of optional stereo headphones. When the headphones are plugged into the jack, the speakers are automatically silenced.

Reduce VOLUME before plugging in the headphones and adjust only after the headphones are in place for private listening.

(Use the ACCESSORY ORDER FORM included in this Guide to order the MODEL 3-5750 Lightweight Stereo Headphones.)

PATCH CORD KIT — No. 5-1051 (Optional)

The optional Patchcord Kit, No., 5-1051, makes it possible to record direct from most low output tape machines, radios, phonographs or CD players equipped with output jacks. Plug adapter into output jacks and into AUX IN jacks on your unit. Direct recordings eliminate background noise problems normally encountered with microphones. (Kit includes complete instructions.)

2 kits are needed for stereo.

CLEANING THE HEADS

Iron oxide particles from the magnetic tape will, in time, build up on the parts that come in direct contact with the tape. These deposits can cause incomplete erasure, a "muffled" sound during playback, and may prevent Automatic Stop.

With the cassette door open and the PLAY button pushed down, the parts indicated can be cleaned (gently) with a liquid head cleaner.

Always unplug the power cord when using a liquid cleaner and allow 30 minutes drying time.

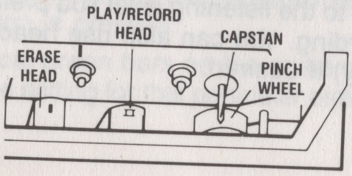

Clean areas indicated after every 40 hours of use.

Another convenient method is to use a cassette head cleaning tape. Follow manufacturer's directions regarding their use.

TAPE CARE

Do not expose your cassettes to direct sunlight or store them in hot places. High temperatures may warp the cassette shell or damage the tape itself.

Keep your cassettes in their boxes when they are not in the cassette player/recorder. This keeps dust from entering the cassette shells.

Your tapes can be erased by magnetic fields produced by permanent magnets, electric motors, electrical transformers, and other devices. Keep tapes away from magnets and magnetic fields.

NOTE: A TV set is one of the devices that create magnetic fields. Therefore, we recommend you remove your tapes from your Entertainment Center when they are not being used.

Wind the tape to one end before removing it from your cassette player/recorder. When it is fully wound, only the tape leader will be visible, not the tape itself. Avoid touching either tape or leader. Even the natural oils on your hands can damage a tape; if oils become deposited on the tape transport mechanism of your cassette player/recorder, they could contaminate other tapes.

If a tape is accidentally pulled from a cassette, insert the tapered end of a large pencil or similar object into the center of the tape hub and gently wind the tape back into the cassette. Be careful not to twist or wrinkle the tape. Care should be taken that all excess tape is wound into the cassette and is taut. If slack is allowed to exist, it can cause the tape to become twisted around the pinch roller and capstan which could result in a damaged cassette.

Use a pencil or similar object to take up the slack.

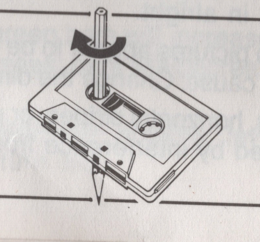

OPTIONAL ACCESSORIES

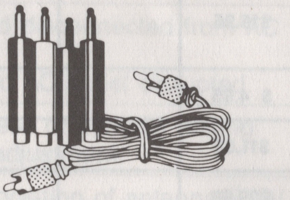

PATCHCORD KIT (need 2 for stereo)
Record (patch) directly from many radios, tape machines, or phonographs to your tape recorder. Eliminate background noise normally encountered with microphone recordings. Use with GE products and many other brands that have 3.5mm or phono type input or output jacks. Kit includes six-foot cord, four adapters, instructions.
No 5-1051 **$11.65**

STEREO HEADPHONE
Lightweight Stereo Headphone with 3.5mm stereo plug.
No. 3-5750 **$16.95**

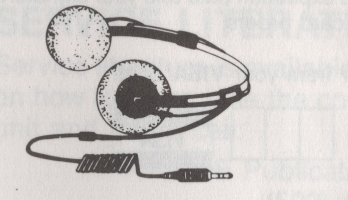

FOR HEADPHONE VERSATILITY, the following adapters included at no extra charge.

1/4″ Adapter - Use lightweight headphone with other stereo products having 1/4″ headphone jack.

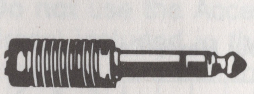

3.5mm Stereo to 3.5mm Mono Adapter. Permits headphone use with mono products having 3.5mm earphone jack.

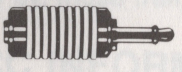

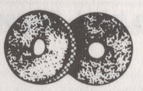

REPLACEMENT PADS FOR MODEL 3-5750 HEADPHONE
No. 5-1870 **3 pairs per pkg.** **$4.95**

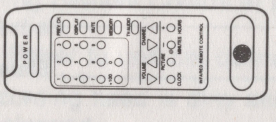

REMOTE CONTROL UNIT
No. 5-4015 **$29.95**

CUSTOMER: CUT ALONG DOTTED LINE.

ACCESSORY ORDER FORM

DESCRIPTION	CATALOG NUMBER	PRICE EACH	QUAN.	TOTAL
Stereo Headphone Lightweight Includes: 1/4" Adapter and Stereo-to-Mono Adapter	3-5750	$16.95		
Headphone Pads (3pr./pk.)	5-1870	$ 4.95		
Patch Cord Kit	5-1051	$11.65		
Remote Control Unit	5-4015	$29.95		

For credit card purchases
Your complete charge card number, its expiration date and your signature are necessary to process all charge card orders.

Copy your complete account number from your **VISA** card.

VISA

My card expires:

Copy your complete account number from your **MasterCard**.

MasterCard

Copy the number above your name on the MasterCard

My card expires:

Authorized Signature

Prices are subject to change without notice.

Total Merchandise .... $

Sales Tax .... $

We are required by law to collect the appropriate sales tax for each individual state, county, and locality to which the merchandise is being sent.

Shipping, Handling, and Insurance .... $ 5.00

Total Amount Enclosed .... $

Use VISA or MasterCard preferably. Money order or check must be in U.S. currency only. No COD or CASH.

All accessories are subject to availability. Where applicable, we will ship a superseding model.

Mail order form and money order or check (in U.S. currency) made payable to Thomson Consumer Electronics, Inc. to:

Consumer Electronics
Mail Order Department
P.O. Box 8419
Ronks, PA 17573-8419

This is your return label. Please print clearly.

To:

Name

Address Apt.

City State ZIP

Please make sure that this form has been filled out completely.

SERVICE CHECKLIST

In case of difficulty, check the following before seeking service.

PROBLEM	POSSIBLE CAUSE
Unit does not turn "On".	• AC Cord disconnected from AC outlet. • Power to AC outlet disrupted.
Normal sound, dim picture.	• Brightness or contrast setting needs adjustment.
Background noise, scrambled picture.	• Check position of antenna/STD/HRC/IRC switch. • Check channel selection. • Temporary local interference. • Some pay/premium cable channels are scrambled.
Normal sound, Multiple image (ghosting).	• Antenna direction.
Background noise, interference.	• Electrical appliances, auto ingition, etc.
No sound.	• Volume turned down or muted. • Possible station trouble; try another channel. • Make sure TAPE or AUX FUNCTION not accidentally selected.
Background noise, snow picture.	• Antenna connection.
Picture too bright. Picture too dark.	• Check brightness and contrast setting.
TV does not operate.	• TV/Audio switch position incorrect.
Radio does not operate.	• TV/Audio switch position incorrect.
Remote Control does not operate.	• Batteries are "dead" or weak. • You are out of sensor range or not aiming Remote Control in proper direction. • AC Power to unit not connected.
Distorted or noisy recordings.	• Recording head is dirty and should be cleaned.

SERVICE

This product should be serviced only by those specially trained in appropriate servicing techniques. For instructions on how to obtain service, refer to the warranty included in this Guide.

Attach your sales receipt to the booklet for future reference or jot down the date this product was purchased or received as a gift. This information will be valuable if service should be required during the warranty period.

Purchase date ______________________

Name of store ______________________

SERVICE LITERATURE

Service literature is available for your unit. For information on how to order, note the complete model number of your unit and, then, call:

GE Publications Ordering
(502) 491-8110

Do not use the Accessory Order Form (or its mailing address) included in this Guide, as service literature is not available from that location.

The service literature will be useful to, and should be used only by, those trained in appropriate servicing techniques.

FCC INFORMATION

This device complies with Part 15 of the FCC Rules. Operation is subject to the following two conditions: (1) This device may not cause harmful interference, and (2) This device must accept any interference received, including interference that may cause undesired operation.

In accordance with FCC requirements, changes or modifications not expressly approved by Thomson Consumer Electronics could void the user's authority to operate this product.

LIMITED WARRANTY

What does your warranty cover?
- Any defect in material or workmanship.

For how long after your purchase:
- 90 days for labor charges.*
- One year for parts.
- Two years for picture tube.

The warranty period for rental units begins with the first rental.

What we will do?
- Pay any Authorized GE Television Servicenter the labor charges to repair your television.*
- Pay any Authorized GE Television Servicenter for the new or, at our option, rebuilt replacement parts and picture tube required to repair your television.

* Warranty labor will not be paid for products used in business and institutional applications, including, but not limited to, hotels, motels, and educational and health-care facilities.

How do you get service?
- Take your GE television to an Authorized GE Television Servicenter. To identify your nearest Authorized GE Television Servicenter, ask your Dealer, look in the Yellow Pages, or Call 1-800-447-1700.
- Show the Authorized Servicenter Representative your evidence of purchase date.
- Pick up your Television when repairs are completed.

What your warranty *does not* cover?
- Customer instruction. (Your Owner's Manual clearly describes how to install, adjust, and operate your television. Any additional information should be obtained from your Dealer.)
- Installation and related adjustments.
- Signal reception problems not caused by your television.
- Damage from misuse or neglect.
- Batteries.
- A television which has been modified or incorporated into other products.
- A television purchased or serviced outside the USA.
- Labor to repair a television used in business or institutional applications.

How does state law relate to this warranty?
- This warranty gives you specific legal rights, and you may also have other rights that vary from state to state.

If you purchased your television in Canada?
- The Canadian Warranty applies in place of this Warranty.

THOMSON CONSUMER ELECTRONICS, INC.

Model 7-7800A
318A8622-0001 (Rev. 0)
91-21

Printed in Hong Kong

570-830901-01

DIVISIÓN AUDIO Y COMUNICACIONES

FAVOR DE GUARDAR ESTO PARA UNA REFERENCIA FUTURA

IMPORTANTE INSTRUCCIONES DE SEGURIDAD

Alguna de la siguiente información quizá no se aplique a su producto en particular. Sin embargo, como con cualquier producto electrónico, se deben tomar precauciones durante su manejo y uso.

- Antes de usar el producto, haga el favor de seguir y hacer caso a todas las advertencias y instrucciones se seguridad y operación localizadas en el producto y en su manual de instrucciones. Guarde todas las instrucciones para una referencia futura.
- No exponga el producto a la lluvia y no úselo cerca de agua, como un lavabo, sótano mojado, piscina, etc.
- Siempre deje suficiente espacio para ventilación alrededor del producto. No ponga el producto en la cama, alfombra, librero o gabinete que pueda obstruir la corriente de aire a través de apeturas de ventilación.
- No exponga el producto a temperaturas extremas como las que se encuentran cera de un radiador caliente, estufa, o en un carro estacionado bajo un sol de verano.
- Conecte sólo en receptáculos de corriente alterna como esta indicado en el producto.
- Algunos productos usan un enchufe polarizado para la línea CA (una de las patas es más ancha). Esto es una característica de seguridad. Si el enchufe no entra completamente en el tomacorriente, vuelva el enchufe y conectelo del otro lado. Si sigue sin caber, contacte a un electricista capacitado para que cambie el tomacorriente. Ud. no quiere que el producto sea contraproducente: el enchufe polarizado es para su seguridad.
- Acomode el cordón del enchufe de forma que no se pueda pellizcar, caminar encima o ser derretido por el calor de una estufa o radiador.
- Para limpiar el gabinete, desconecte el cordón de corriente alterna, entonces use un trapo suave humedecido solamente con agua.
- No pongan velas, cigarillos o cigarros encendidos encima del producto.
- Desenchufe el cordón de la línea CA del tomacorriente durante un temporal de relámpagos o cuando el producto no esté en uso por largos períodos de tiempo. Esto evitará cualquier daño debido a relámpagos o sobretensión en la línea de energía.
- Tome precauciones para evitar que caigan objectos y se derramen liquidos encima o dentro del producto.
- Nunca añada accesorios que no sean diseñados para acompañar este producto.
- No toque la unidad o el cordón de energía cuando las manos estén mojadas o humedas.

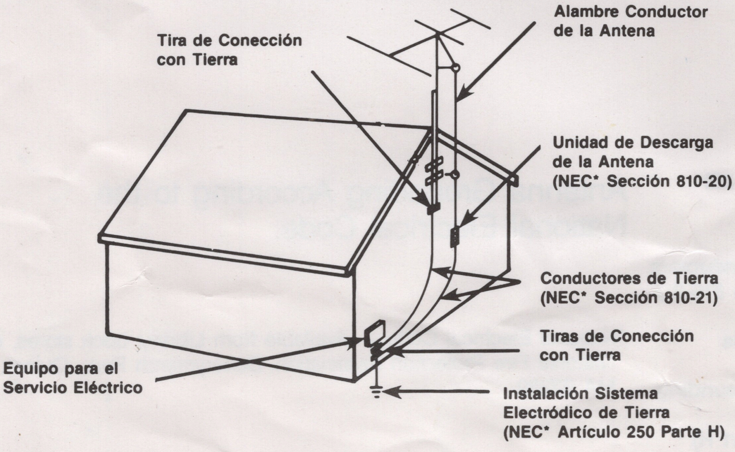

- Carros y Estantes — El artefacto deberá ser usado sólo con carros y estantes que hayan sido recomendados por el fabricante.
- La combinación de un artefacto y un carro deberá ser movido con cuidado. Paradas repentinas, excesiva fuerza y superficies desniveladas pueden causar que la combinación de un artefacto con un carro se voltee.

- Al estar instalando este producto, use solamente las instrucciones, herramientas y materias aprobados por el fabricante.
- No trate de desarmar el gabinete. Este producto no tiene componentes reemplazables por el cliente.
- Servicios por daños sufridos — este producto debe ser reparado por personal cualificado cuando.
  A. El cordón de corriente alterna o el enchufe haya sufrido algun daño, o
  B. Se hayan caido objectos, o derramado liquidos dentro del producto, o
  C. El producto ha sido expuesto a la lluvia; o
  D. El producto no parezca funcionar bien o exhiba un cambio evidente en funcionamiento, o
  E. Se haya caido, o el gabinete fuese dañado.
- Cuando se terminen el servicio o las reparaciones, pida al técnico de examinar el producto para las medidas de seguridad descritas en el manual y de confirmar que las partes de reemplazo tengan las mismas características de seguridad como las partes originales.
- **SI SU PRODUCTO FUNCIONA CON PILAS,** haga caso a las precauciones siguientes:
  A. Electrólito puede gotear de cualquier pila si está mezclada con una pila de un tipo diferente, si ha sido insertada incorrectamente, o si no se reemplazan todas las pilas al mismo tiempo.
  B. Cualquier pila puede explotar o gotear electrólito si se echa en un fuego o si trata de cargar una pila no recargable.
  C. Deseche inmediatemente pilas con fuga. Éstas pueden causar quemaduras a la piel o otra herida personal.
- **SI SU PRODUCTO ESTÁ EQUIPADO CON TERMINALES DE ANTENA,** y si se conecta una antena exterior, asegúrese que el sistema haga tierra para proveer alguna protección en caso de sobretensión de voltaje y acumulación de cargas eléctricas. Una antena exterior debe ser localizada a distancia de las líneas de corriente eléctrica.
- **SI EL PRODUCTO VA A ESTAR CONECTADO CON UN SISTEMA CATV (TELEVISIÓN POR CABLE),** llame la atención del técnico que va a instalar el cable sobre el Artículo 820-22 del NEC*. Esto provee información referente a como hacer tierra y, en particular, especifica que el cable de tierra debe estar conectado con el sistema de tierra del edificio, lo más cerca posible de donde entra el cable.

Para Poner a Tierra la Antenna Según las Instrucciones del Código Eléctrico Nacional

*Código Eléctrico Nacional — Disponible à la biblioteca, librerías o National Fire Protection Association, Batterymarch Park, Quincy, MA 02269.

AUDIO & COMMUNICATIONS DIVISION

PLEASE READ AND SAVE FOR FUTURE REFERENCE

IMPORTANT SAFETY INSTRUCTIONS

Some of the following information may not apply to your particular product; however, as with any electronic product, precautions should be observed during handling and use.

- Before using the product, please follow and adhere to all warnings, safety and operating instructions located on the product and in the user book. Save all instructions for future reference.
- Do not expose product to rain and do not use near water; such as, sink, wet basement, swimming pools, etc.
- Always leave sufficient space around the product for ventilation. Do not place product in or on a bed, rug, in a bookcase or cabinet that may prevent air flow through vent openings.
- Do not expose product to extreme temperatures such as found near a hot radiator or stove, or in a car parked in the Summer sun.
- Connect power cord only to AC power source as marked on the product.
- Some products employ a polarized AC line plug (one blade is wider). This is a safety feature. The plug will go in the power outlet only one way. If the plug doesn't go into the outlet completely, turn the plug over and put it in the other way. If it still doesn't fit, contact a qualified electrician to change the outlet. Do not defeat the safety purpose of the polarized plug.
- Route power cord to prevent it from being pinched, or walked on, or melted by a hot stove or radiator.
- To clean cabinet, unplug AC power cord, then use a soft cloth dampened only with water.
- Do not place lighted candles, cigarettes, cigars, etc. on the product.
- Unplug AC power cord from outlet during a lightning storm or when product is left unused for a long period of time to prevent damage due to lightning or power line surges.
- Care should be taken so that objects do not fall and liquids do not spill into the product.
- Never add accessories that the product has not been designed to accommodate.
- Use only the manufacturer's approved mounting instructions and hardware when installing product.
- Do not attempt to disassemble the cabinet. This product does not contain customer serviceable components.
- Do not handle the unit or power cord when your hands are wet or damp.
- Carts and Stands – The appliance should be used only with a cart or stand that is recommended by the manufacturer.
- An appliance and cart combination should be moved with care. Quick stops, excessive force, and uneven surfaces may cause the appliance and cart combination to overturn.

- Damage Requiring Service — This product should be serviced by qualified service personnel when:
  - A. The power supply cord or the plug has been damaged; or
  - B. Objects have fallen, or liquid has been spilled into the product; or
  - C. The product has been exposed to rain; or
  - D. The product does not appear to operate normally or exhibits a marked change in performance; or
  - E. The product has been dropped, or the cabinet damaged.
- When service or repairs are completed, ask the service technician to perform the safety check described in the service manual and to confirm that replacement parts have the same safety characteristics as the original parts.
- **IF YOUR PRODUCT OPERATES ON BATTERIES,** adhere to the following precautions:
  - A. Any battery may leak electrolyte if mixed with a different battery type, if inserted incorrectly, or if all batteries are not replaced at the same time.
  - B. Any battery may leak electrolyte or explode if disposed of in fire or an attempt is made to charge a battery not intended to be recharged.
  - C. Discard leaky batteries immediately. Leaking batteries can cause skin burns or other personal injury.
- **IF YOUR PRODUCT IS EQUIPPED WITH ANTENNA TERMINALS,** and if an outdoor antenna is connected, be sure the system is grounded so as to provide some protection against voltage surge and built-up static charges. An outdoor antenna should be located away from power lines.
- **IF PRODUCT IS TO BE CONNECTED TO A CATV SYSTEM,** call the CATV system installer's attention to Article 820-22 of the NEC that provides guidelines for proper grounding and, in particular, specifies that the cable ground shall be connected to the grounding system of the building, as close to the point of cable entry as practical.

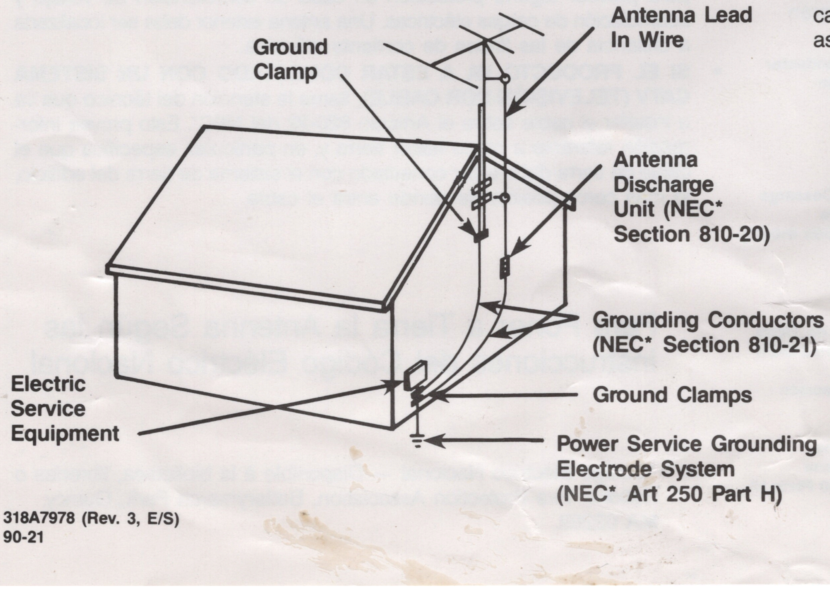

Antenna Grounding According to the National Electrical Code.

*National Electrical Code — Available from Library, book stores, or National Fire Protection Association, Batterymarch Park, Quincy, MA 02269.

318A7978 (Rev. 3, E/S)
90-21

Printed in Hong Kong
592-820901-03

22C-1

PRODUCT REGISTRATION DEPARTMENT

Please do not send any products or correspondence to this address.

PLACE FIRST-CLASS STAMP HERE

GE Consumer Electronics Products
P.O. Box 173028
Denver, CO 80217-3028

Please fold here.

18 **To help us understand our customers' lifestyles, please indicate the interests and activities in which *you* or *your spouse* enjoy participating on a *regular* basis:**

01. ☐ Bicycling Frequently
02. ☐ Golf
03. ☐ Physical Fitness/Exercise
04. ☐ Running/Jogging
05. ☐ Snow Skiing Frequently
06. ☐ Tennis Frequently
07. ☐ Bowling
08. ☐ Camping/Hiking
09. ☐ Fishing Frequently
10. ☐ Hunting/Shooting
11. ☐ Power Boating
12. ☐ Sailing
13. ☐ Crafts
14. ☐ Crossword Puzzles
15. ☐ Grandchildren
16. ☐ Needlework/Knitting
17. ☐ Outdoor Gardening
18. ☐ Sewing
19. ☐ Walking for Health
20. ☐ Automotive Work
21. ☐ Electronics
22. ☐ Home Workshop/Do It Yourself
23. ☐ Motorcycles
24. ☐ Recreational Vehicles
25. ☐ Stereo, Records/Tapes/Discs
26. ☐ Avid Book Reading
27. ☐ Bible/Devotional Reading
28. ☐ Current Affairs/Politics
29. ☐ Health Foods/Vitamins
30. ☐ House Plants
31. ☐ Photography
32. ☐ Attend Cultural/Arts Events
33. ☐ Charities/Volunteer Activities
34. ☐ Fashion Clothing
35. ☐ Fine Art/Antiques
36. ☐ Foreign Travel
37. ☐ Gourmet Cooking/Fine Foods
38. ☐ Wines
39. ☐ Coin/Stamp Collecting
40. ☐ Collectibles/Collections
41. ☐ Our Nation's Heritage
42. ☐ Real Estate Investments
43. ☐ Stock/Bond Investments
44. ☐ Veterans Benefits/Programs
45. ☐ Entering Sweepstakes
46. ☐ Home Video Games
47. ☐ Household Pets (cats, dogs, etc.)
48. ☐ Money Making Opportunities
49. ☐ Science Fiction
50. ☐ Wildlife/Environmental Issues
51. ☐ Career-Oriented Activities
52. ☐ Personal/Home Computers
53. ☐ Science/New Technology
54. ☐ Self Improvement
55. ☐ VCR Recording/Viewing
56. ☐ Watching Cable TV
57. ☐ Watching Sports on TV
58. ☐ NONE OF THE ABOVE

19 **From the above list, please indicate the numbers representing the 3 most important activities for:** **You** ___ ___ ___ **Spouse** ___ ___ ___

Thanks for taking time to fill out this questionnaire. Your answers will be used for market research studies and reports—and will help us better serve you in the future. They will also allow you to receive important mailings and special offers from a number of fine companies whose products and services relate directly to the specific interests, hobbies, and other information indicated above. Through this selective program, you will be able to obtain more information about activities in which you are involved and less about those in which you are not. Please check here, if for some reason, you would prefer *not* to participate in this opportunity. ☐

DATE CODE: 3 2 3 8

MODEL: 7-7800A

Please seal or tape. Do not staple.

U.S. OWNER REGISTRATION

Not applicable outside the United States

Thank you for choosing GE! Please fill out and return this card to register your purchase. The information on the card enables us to serve you better with products and promotions developed to meet your needs and interests. Please take a moment right now and fill it out.

1 1. ☐ Mr. 2. ☐ Mrs. 3. ☐ Ms. 4. ☐ Miss

22C-1

First Name | Initial | Last Name

Street | Apt. No.

City | State | Zip

2 Date of Purchase: Month Day Year

3 Telephone No.: Area Code

4 Type of store where purchased:
1. ☐ Department Store
2. ☐ Discount Store
3. ☐ Catalog Showroom
4. ☐ Drug Store
5. ☐ Automotive Store
6. ☐ Mail Order
7. ☐ Received as a Gift
8. ☐ Telephone Specialty Store
9. ☐ Telephone Company Store
10. ☐ Other____________

5 Did you:
1. ☐ Purchase this product for your own use?
2. ☐ Receive this product as a gift (go to A or B):
   A. ☐ From someone within your household
   B. ☐ From someone outside your household
3. ☐ Other ____________

6 What was the full price you paid for this product?

$ ____ .00

7 What one other brand did you seriously consider purchasing?

Please specify: ____________

8 Select the three (3) most important factors influencing your selection of this product:
1. ☐ Always works well
2. ☐ Sounds great
3. ☐ Lasts many years
4. ☐ Good wake-up features
5. ☐ Excellent value
6. ☐ Offers everything
7. ☐ Full warranty
8. ☐ Superior materials
9. ☐ Long warranty
10. ☐ Brand name
11. ☐ Portable/Lightweight
12. ☐ Stereo sound
13. ☐ Latest technology
14. ☐ Small/Compact
15. ☐ Distinctive appearance
16. ☐ Lots of features
17. ☐ Price
18. ☐ Impressive features
19. ☐ Large speakers
20. ☐ Large size

9 How did you *first* become aware of this product? (Check *one* only)
1. ☐ Newspaper advertisement
2. ☐ Magazine advertisement
3. ☐ Television advertisement
4. ☐ Radio advertisement
5. ☐ Friend's/Relative's recommendation
6. ☐ Salesperson's recommendation
7. ☐ Store display/demonstration
8. ☐ Other ____________

10 In which room of the house will this product be used mostly?
1. ☐ Kitchen
2. ☐ Adult's bedroom
3. ☐ Child's bedroom
4. ☐ Living room
5. ☐ Dining room
6. ☐ Family/Study/Rec. room
7. ☐ Bathroom
8. ☐ Basement/Garage/Attic
9. ☐ Outdoor usage
10. ☐ Other: ____________

11 Date of birth of person whose name appears above:

Month | Year 1 9 _ _

12 Marital Status
1. ☐ Married
2. ☐ Divorced/Separated
3. ☐ Widowed
4. ☐ Single/Never Married

13 Occupation:

Occupation	You	Spouse
Homemaker	1. ☐	1. ☐
Professional/Technical	2. ☐	2. ☐
Executive/Administrator	3. ☐	3. ☐
Middle Management	4. ☐	4. ☐
Sales/Marketing	5. ☐	5. ☐
Clerical or Service Worker	6. ☐	6. ☐
Tradesman/Machine Oper./Laborer	7. ☐	7. ☐
Retired	8. ☐	8. ☐
Student	9. ☐	9. ☐
Self Employed/Business Owner	10. ☐	10. ☐

14 What are the ages of all children living at home?

☐ NONE

☐ Under 1	☐ 5 yrs.	☐ 10 yrs.	☐ 15 yrs.
☐ 1 yr.	☐ 6 yrs.	☐ 11 yrs.	☐ 16 yrs.
☐ 2 yrs.	☐ 7 yrs.	☐ 12 yrs.	☐ 17 yrs.
☐ 3 yrs.	☐ 8 yrs.	☐ 13 yrs.	☐ 18 yrs.
☐ 4 yrs.	☐ 9 yrs.	☐ 14 yrs.	☐ 19 +

15 Which group describes your annual family income:
1. ☐ Under $14,999
2. ☐ $15,000-$19,999
3. ☐ $20,000-$24,999
4. ☐ $25,000-$29,999
5. ☐ $30,000-$34,999
6. ☐ $35,000-$39,999
7. ☐ $40,000-$44,999
8. ☐ $45,000-$49,999
9. ☐ $50,000-$59,999
10. ☐ $60,000-$74,999
11. ☐ $75,000-$99,999
12. ☐ $100,000 & over

16 Which of the following do you use regularly?
1. ☐ American Express, Diners Club, Carte Blanche
2. ☐ Bank credit card (MasterCard, Visa)
3. ☐ Gas, Dept. store, etc. credit card(s)
4. ☐ Airline club/frequent flyer program
5. ☐ None of the above

17 For your primary residence, do you:
1. ☐ Own a house?
2. ☐ Rent a house?
3. ☐ Rent an apartment?
4. ☐ Own a townhouse or condominium?

151B4058-3
88-21

Printed in Hong Kong
592-830901-01

Personal Audio/Video Entertainment System

All-in-One Entertainment Center – for your personal viewing and listening pleasures!

- Full-Featured 9" Color TV with Broadcast Stereo Sound
- AM/FM/FM Stereo Radio
- Cassette Stereo Player/Recorder
- Remote Control for TV or Radio Operation

7-7800

Personal Audio/Video Entertainment System

All-in-One Entertainment Center – for your personal viewing and listening pleasures!

- Full-Featured 9" Color TV Includes:
  - — Broadcast Stereo Sound
  - — 181-Channel Cable Ready
  - — On-Screen Display
- AM/FM/FM Stereo Radio
- Cassette Stereo Player/Recorder
- Remote Control for TV or Radio Operation
- Audio/Video Input Jacks Allow for Compact Disc Player or VCR Use

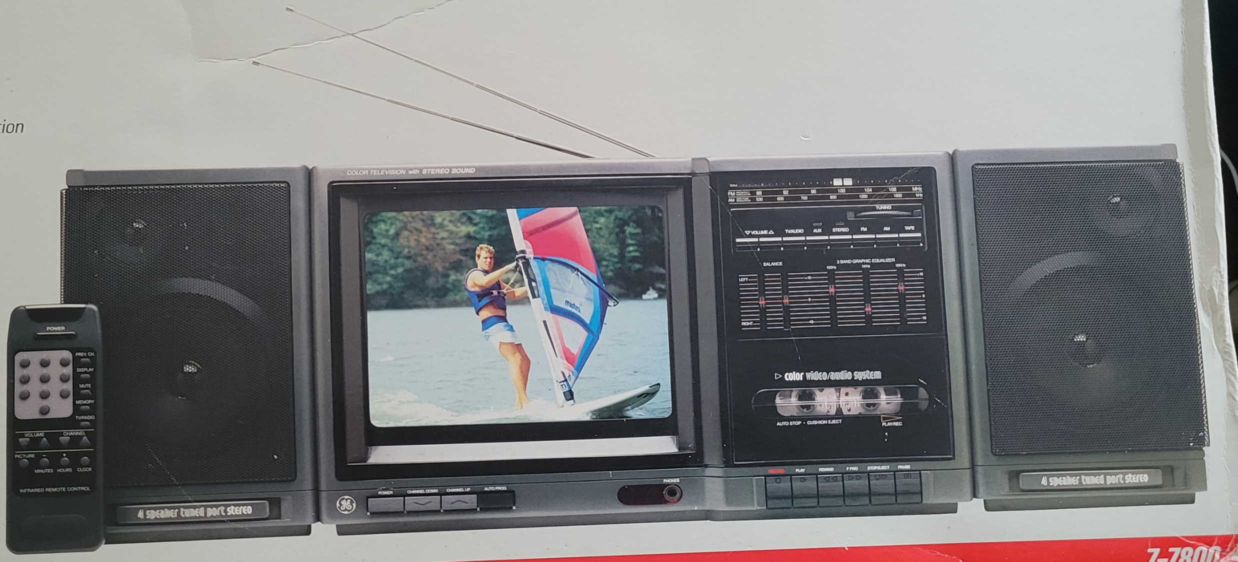

7-7800

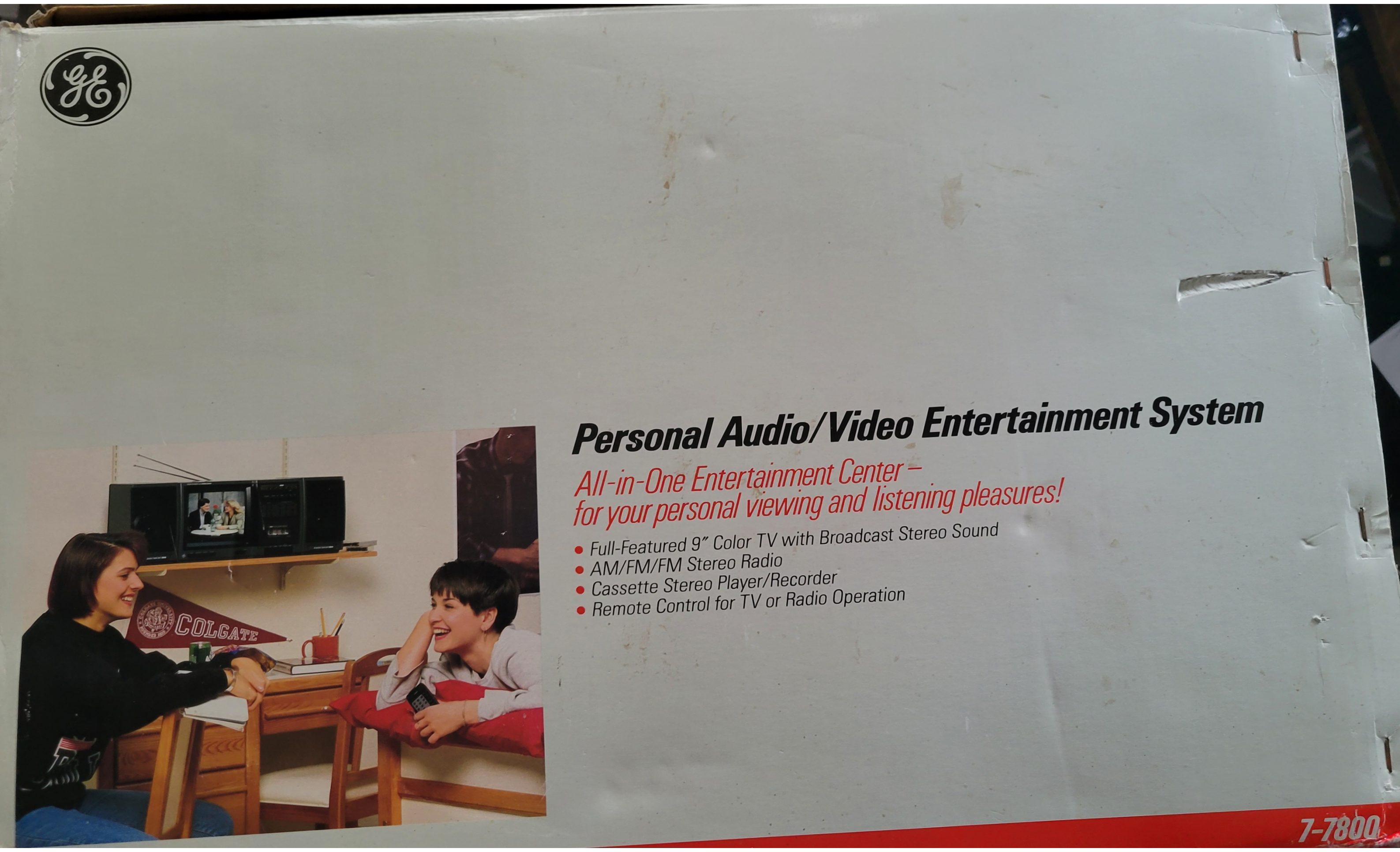
Personal Audio/Video Entertainment System
All-in-One Entertainment Center –
for your personal viewing and listening pleasures!
• Full-Featured 9" Color TV with Broadcast Stereo Sound
• AM/FM/FM Stereo Radio
• Cassette Stereo Player/Recorder
• Remote Control for TV or Radio Operation
COLGATE
7-7800

Personal Audio/Video Entertainment System

All-in-One Entertainment Center – for your personal viewing and listening pleasures!

Video
- 9″ Color TV with Broadcast Stereo Sound
- 181-Channel Cable Ready
- On-Screen Display — Used to Display Channel Numbers, Special Functions and Picture Menus
- Auto Programming Which Automatically Puts All Available Channels into Memory
- On-Screen Display Clock Function

Audio-Radio
- AM/FM/FM Stereo with LED Indicators
- 3-Band Equalizer
- Slide Balance Control
- Vernier Tuning
- Slide-Rule Dial Scale
- Built-In Dipole Antenna
- Separate Built-In AM Antenna

Audio-Cassette
- Stereo Player/Recorder
- One-Button Record
- Automatic Shutoff
- Soft Cushion Eject

25-Button Remote Control
- TV or Radio Operation at the Tip of Your Fingers

Convenience
- AC Operation
- Built-In Hand Grip
- Most Frequently Used Controls Located Both on TV Set and Remote Control Unit
- FM Stereo and TV Stereo LED Indicators

Auxiliary
- Stereo Headphone Jack
- Audio/Video Input Jacks Allow for Compact Disc Player or VCR Use

Two Detachable Speakers with Tuned Ports, 5″ Woofers & 2″ Cone Tweeters

Enjoy your GE Personal Audio/Video Entertainment System wherever you need to be...

...at work

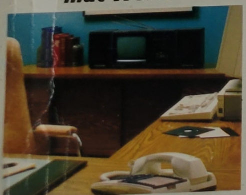

...at school

...at home

...at play

Thomson Consumer Electronics, Inc.
P.O. Box 1976, Indianapolis, Indiana 46206
Made in China

7-7800

Personal Audio/Video Entertainment System

All-in-One Entertainment Center –
for your personal viewing and listening pleasures!

- Full-Featured 9″ Color TV with Broadcast Stereo Sound
- AM/FM/FM Stereo Radio
- Cassette Stereo Player/Recorder
- Remote Control for TV or Radio Operation

7-7800